EXTRACTORES **COCINA**

GS-600

Cod. **00116002** EAN **8422248100601**

37,5 cm

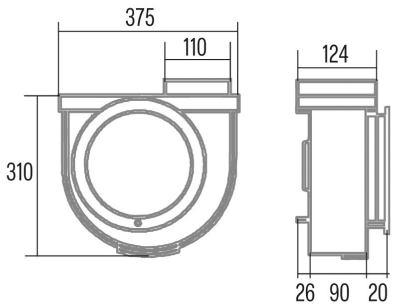

INFORMACIÓN GENERAL

EAN/UPC	8422248100601
Subfamily	Kitchen Extractor

Product fiche according to directives EU65/2014 - EN61591, EN60704-2-13, EN50564

AEC (Energy consumption per year) (kWh/año)	51,7
EEI class (Energy efficiency class)	C
FDE (Fluid dynamic efficiency)	12,5
FDE class (Fluid dynamic efficiency class)	E
LE class (Light efficiency class)	N_A
GFE Class (Grease filtering efficiency class)	N_A
Normal mode airflow MAX (m3/h)	480
Normal mode acustic power MAX (dB)	50
Po (Off-mode power consumption) (W)	0
Ps (Stand-by power consumption) (W)	0

Integration directive EU 66/2014

f (Factor Increase in the time)	1,6
EEI (Energy efficiency Index)	78,9
QBEP (Maximum airflow point efficiency) (m3/h)	311,7
PBEP (Maximum pressure point efficiency) (Pa)	131,6
WBEP (Electrical power consumption at maximum efficiency) (W)	91,4

External Dimensions

Width (mm)	375
Depth (mm)	136
Minimum Total Height (mm)	650
Outlet Diameter (mm)	110

Characteristics

Motor Quantity	1
Maximum Pressure (Pa)	200
Free Outlet Airflow (m3/h)	480
Booster	-
Timer	-
Charcoal Filter Change Indicator	-
Remote control	-

Installation

Minimum distance to an electric cooktop (mm)	65
Minimum distance to a gas cooktop (mm)	650
Recirculation Option	-
Charcoal Filter	-
Back Draught Shutter	-
Inner shield	-

Electric Connection

Rated voltage (V)	230
Rated frequency (Hz)	50
Rated power input (W)	105
Protection against electric shock	Class I
Power cord length (m)	0,5
Plug type	No plug

Accessories

Upper Decorative Duct Extension	N_A
White Decorative Duct	N_A
Black Decorative Duct	N_A
Island Tube Enhancer	N_A
Back Draught Shutter	N_A

MAX PRO Metal Filter	N_A
Active Charcoal Filter	N_A
Noiseless Flexible Duct	N_A
Recirculating kit	N_A