HORNOS **MULTIFUNCIÓN**



MDS 8008 BK

Cod. **07001405** EAN **8422248347655**

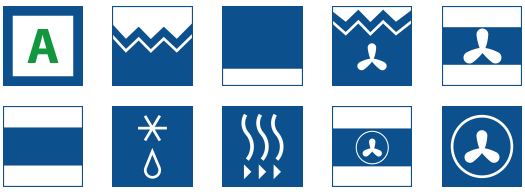

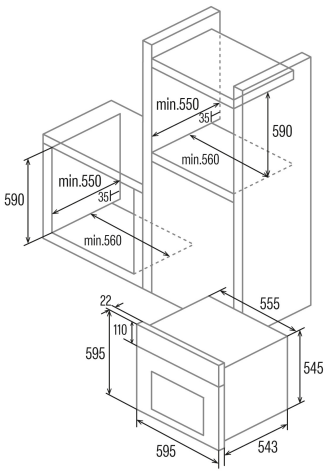

INFORMACIÓN GENERAL

EAN/UPC	8422248347655
Subfamily	Multifunction

Product fiche

Energy efficiency index (IEE)	117
Energy efficiency Class	A
Energy consumption in conventional mode [kWh/cycle]	0,85
Energy consumption in fan-forced mode [kWh/cycle]	0,84
Heat source	Electricity
Mass of the appliance [Kg]	30,4
Number of cavities	1
Cavity volume (L)	80

Dimensions

Width (mm)	556
Height (mm)	545
Depth (mm)	550

Controls

Control type	Mechanical
Display	WHITE
Number of functions	8
Functions	Bottom_heating;Defrosting;3D cooking;Top and bottom heating with fan;Turbo heating;Grill and fan;Top and bottom heating;Grill
Timer	Electronic
On/Off indicator	√
Minimum temperature [°C]	40
Maximum temperature [°C]	240

Characteristics

Cleaning	Aquasmart
Removable inner glass	√
Light type	LED
Number of light bulbs	15
Light bulb power [W]	1
Number of door glasses	2
Door manual lock	√
Soft close	-
Cavity type	Flat
Levels	6
Telescopic guides	1
Convection fan	√

Security

Cooling fan	√

Electrical connection

Upper heating element power [W]	900
Rated voltage (V)	220-240
Rated frequency (Hz)	50/60
Rated power input (W)	2300
Power cord length (m)	1,5

Accessories

Flat tray	√
Deep Tray	√
Grill	√
Telescopic guides	√