HORNOS **MULTIFUNCIÓN**



MT 8012 WH

Cod. **07002412** EAN **8422248094016**

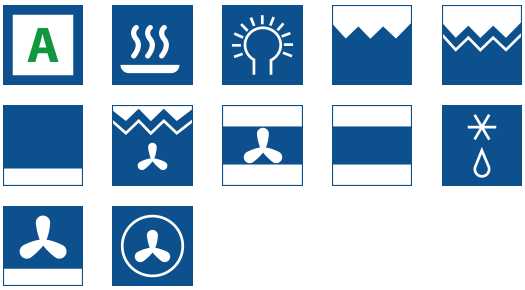

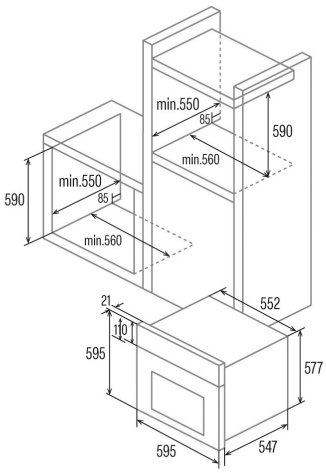

INFORMACIÓN GENERAL

EAN/UPC	8422248094016
Subfamily	Multifunction

Product fiche

Energy efficiency index (IEE)	86,6
Energy efficiency Class	A
Energy consumption in conventional mode [kWh/cycle]	0,71
Energy consumption in fan-forced mode [kWh/cycle]	0,81
Heat source	Electricity
Mass of the appliance [Kg]	39,5
Number of cavities	1
Cavity volume (L)	72

Dimensions

Width (mm)	595
Height (mm)	595
Depth (mm)	568
Built-in width (mm)	560
Buit-in height (mm)	590
Built-in depth (mm)	550

Controls

Control type	Touch control
Display	LCD
Number of functions	12
Functions	Turbo_heating;Grill;Double Grill;Bottom heating;Top and bottom heating with fan;Bottom heating with fan;Fast preheat;Double grill with fan;Defrosting;Light;Top and bottom heating
Timer	Electronic
On/Off indicator	√
Thermostat indicator	√
Minimum temperature [°C]	50
Maximum temperature [°C]	250
Thermal probe	-

Characteristics

Cleaning	Aquasmart Automatic
Enamel	Black
Drop down grill	-
Removable inner glass	√
Number of light bulbs	25
Light bulb power [W]	1
Number of door glasses	3
Door manual lock	-
Soft close	√
Cavity type	Flat
Side Racks	√
Levels	5
Telescopic guides	1
Convection fan	√

Security

Cooling fan	√
Overheating protection	√
Automatic safety shutdown	√
Pyrolisis door lock	-
Pyrolisis lock indicator	-

Electrical connection

Upper heating element power [W]	900
Lower heating element power [W]	1100
Turbo heating element power [W]	2000
Rated voltage (V)	220-240
Rated frequency (Hz)	50/60
Rated power input (W)	2380
Protection against electric shock	Class I
Power cord length (m)	1
Plug type	No plug

Accessories

Flat tray	√
Deep Tray	√
Steam tray	-
Grill	√
Inner grill	-
Telescopic guides	√
Tray Handle	-
Removable tank	-
Pizza Stone	-
Roast kit	-