HORNOS **MULTIFUNCIÓN**



MD 6106 X

Cod. **07033303** EAN **8422248076029**

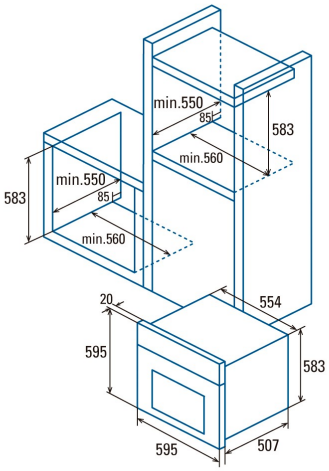

INFORMACIÓN GENERAL

EAN/UPC	8422248076029
Subfamily	Multifunction

Product fiche

Energy efficiency index (IEE)	106,6
Energy efficiency Class	A
Energy consumption in conventional mode [kWh/cycle]	0,82
Energy consumption in fan-forced mode [kWh/cycle]	0,79
Heat source	Electricity
Mass of the appliance [Kg]	28
Number of cavities	1
Cavity volume (L)	60

Dimensions

Width (mm)	595
Height (mm)	595
Depth (mm)	507
Built-in width (mm)	560
Buit-in height (mm)	583
Built-in depth (mm)	550

Controls

Control type	Touch control
Display	No
Number of functions	6
Functions	Double_grill_with_fan;Double Grill;Grill;Top and bottom heating;Bottom heating with fan;Top and bottom heating with fan
Timer	Electronic
On/Off indicator	-
Thermostat indicator	√
Minimum temperature [°C]	50
Maximum temperature [°C]	250
Thermal probe	-

Characteristics

Cleaning	Aquasmart Manual
Enamel	Black
Drop down grill	-
Removable inner glass	√
Number of light bulbs	15
Light bulb power [W]	1
Number of door glasses	2
Door manual lock	-
Soft close	-
Cavity type	Embossed
Side Racks	-
Levels	5
Telescopic guides	No
Convection fan	√

Security

Cooling fan	√
Overheating protection	√
Automatic safety shutdown	√
Pyrolisis door lock	-
Pyrolisis lock indicator	-

Electrical connection

Upper heating element power [W]	900

Lower heating element power [W]	1100
Rated voltage (V)	220-240
Rated frequency (Hz)	50/60
Rated power input (W)	2180
Protection against electric shock	Class I
Power cord length (m)	1,4
Plug type	No plug

Accessories

Flat tray	√
Deep Tray	-
Steam tray	-
Grill	√
Inner grill	-
Telescopic guides	-
Tray Handle	-
Removable tank	-
Pizza Stone	-
Roast kit	-