HORNOS **MULTIFUNCIÓN**



MDS 8007 FB

Cod. **07034606** EAN **8422248373173**

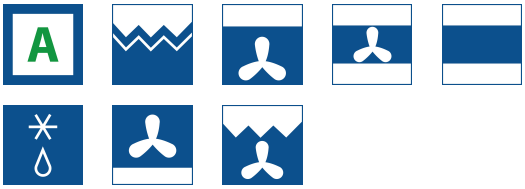

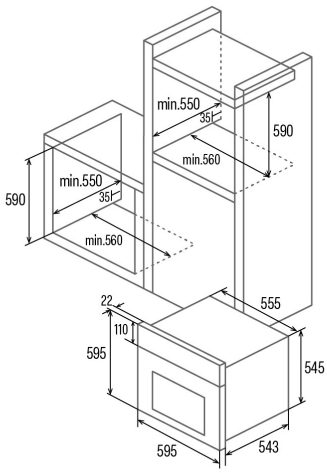

INFORMACIÓN GENERAL

EAN/UPC	8422248373173
Subfamily	Multifunction

Product fiche

Energy efficiency index (IEE)	86,6
Energy efficiency Class	A
Energy consumption in conventional mode [kWh/cycle]	0,85
Energy consumption in fan-forced mode [kWh/cycle]	0,84
Heat source	Electricity
Mass of the appliance [Kg]	30,6
Number of cavities	1
Cavity volume (L)	80

Dimensions

Width (mm)	595
Height (mm)	595
Depth (mm)	543

Controls

Control type	Electronic
Display	WHITE
Number of functions	7
Functions	Double_Grill;Top heating with fan;Top and bottom heating with fan;Double grill with fan;Top and bottom heating;Defrosting;Bottom heating with fan
Timer	Electronic
On/Off indicator	√
Thermostat indicator	-
Minimum temperature [°C]	40
Maximum temperature [°C]	240

Characteristics

Enamel	Black
Removable inner glass	√
Light type	LED
Number of light bulbs	1,5
Light bulb power [W]	1
Number of door glasses	2
Door manual lock	√
Soft close	-
Cavity type	Flat
Side Racks	√
Levels	5
Telescopic guides	1
Convection fan	√

Security

Cooling fan	√
Automatic safety shutdown	√

Electrical connection

Rated voltage (V)	220-240
Rated frequency (Hz)	50/60
Plug type	Type F

Accessories

Flat tray	√
Deep Tray	√
Grill	√