HORNOS **MULTIFUNCIÓN**



MRA 7108 WH

Cod. **07035009** EAN **8422248077033**

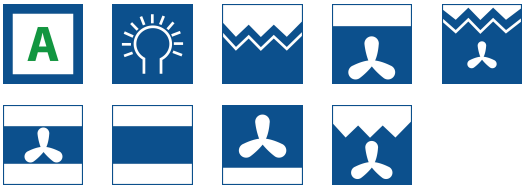

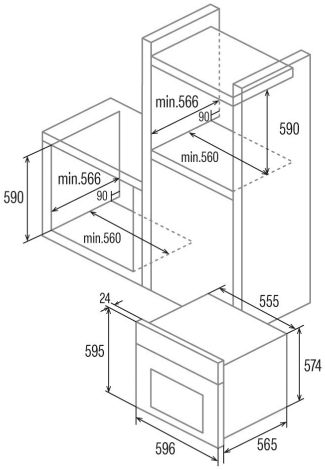

INFORMACIÓN GENERAL

EAN/UPC	8422248077033
Subfamily	Multifunction

Product fiche

Energy efficiency Class	A
Energy consumption in conventional mode [kWh/cycle]	0,76
Energy consumption in fan-forced mode [kWh/cycle]	0,75
Heat source	Electricity
Mass of the appliance [Kg]	28
Cavity volume (L)	60

Dimensions

Width (mm)	595
Height (mm)	595
Depth (mm)	565
Built-in width (mm)	560
Buit-in height (mm)	590
Built-in depth (mm)	566

Controls

Control type	Mechanical
Display	No
Number of functions	7
Functions	Light;Top heating with fan;Bottom_heating_and_fan;Top and bottom heating with fan;Top and bottom heating;Grill and fan;Double_grill;Double grill with fan
Timer	Mechanical
On/Off indicator	-
Thermostat indicator	√
Minimum temperature [°C]	40
Maximum temperature [°C]	Ovens
Thermal probe	-

Characteristics

Cleaning	No
Enamel	Black
Drop down grill	-
Removable inner glass	√
Number of light bulbs	15
Light bulb power [W]	1
Number of door glasses	2
Door manual lock	-
Soft close	-
Cavity type	Flat
Side Racks	√
Levels	5
Telescopic guides	No
Convection fan	√

Security

Cooling fan	√
Overheating protection	√
Automatic safety shutdown	√
Pyrolisis door lock	-
Pyrolisis lock indicator	-

Electrical connection

Upper heating element power [W]	1000

Lower heating element power [W]	1200
Rated voltage (V)	220-240
Rated frequency (Hz)	50/60
Rated power input (W)	2300
Power cord length (m)	1,25
Plug type	Type F

Accessories

Flat tray	√
Deep Tray	√
Steam tray	-
Grill	√
Inner grill	-
Telescopic guides	-
Tray Handle	-
Removable tank	-
Pizza Stone	-
Roast kit	-
Lateral Grid	640