INTEGRATED **HOODS**

# ARMONIA 90 X

Cod. **02189309** EAN **8422248110587**

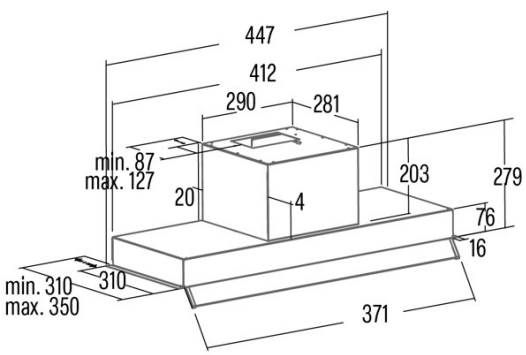


## GENERAL INFORMATION

| | |
|---|---|
| EAN/UPC | 8422248110587 |
| Subfamily | Integrated |

## Product sheet according to directives EU65/2014 - EN61591, EN60704-2-13, EN50564

| | |
|---|---|
| AEC (Annual energy consumption) (kWh/year) | 100,9 |
| EEI class (energy efficiency class) | C |
| FDE (fluid dynamic efficiency) | 16,3 |
| FDE class (fluid dynamic efficiency class) | D |
| LE (light efficiency) (lux/W) | 21,4 |
| LE class (light efficiency class) | B |
| GFE (grease filtering efficiency) | 64,8 |
| GFE class (grease filtering efficiency class) | D |
| Airflow in normal mode MIN (m3/h) | 385 |
| Airflow in normal mode MAX (m3/h) | 645 |
| Acoustic power in normal mode MIN (dB) | 56 |
| Acoustic power in normal mode MAX (dB) | 70 |
| Po (energy consumption in off mode) (W) | 0 |
| Ps (energy consumption in standby mode) (W) | 0 |

## Integration directive EU 66/2014

| | |
|---|---|
| *f* (time increase factor) | 1,4 |
| EEI (Energy Efficiency Index) | 82,4 |
| QBEP (maximum efficiency at air flow point) (m3/h) | 375,3 |
| PBEP (maximum efficiency at pressure point) (Pa) | 295 |
| WBEP (power consumption at maximum efficiency) (W) | 188,8 |
| WL (nominal power lighting system) (W) | 6 |
| EMIDDLE (Average illuminance on the cooking surface) (lux) | 269 |

## External Dimensions

| | |
|---|---|
| Width (mm) | 898 |
| Depth (mm) | 310 |
| Maximum total height (mm) | 280 |
| Minimum total height (mm) | 280 |
| Diamètre de sortie (mm) | 150, 125 |

## Characteristics

| | |
|---|---|
| Motor quantity | 1 |
| Motor model | TA |
| Maximum pressure (Pa) | 430 |
| Filter technology | Aluminium mesh |
| Control technology | Mechanical push button |
| Booster | - |
| Power levels | 3 |
| Timer | - |
| Filter saturation indicator | - |
| Charcoal filter replacement indicator | - |
| Dimmer function | - |
| Connectivity | No |
| Remote control | - |
| Display | - |

## Lighting

| | |
|---|---|
| Light model | CSLED |
| Ray technology | LED |

## Installation

| | |
|---|---|
| Minimum distance to electric plate (mm) | 550 |
| Minimum distance to gas plate (mm) | 650 |
| Recirculation option | - |
| Charcoal filter | √ |

| | |
|---|---|
| Back draught shutter | No |
| Inner shield | - |

## Electric connection

| | |
|---|---|
| Nominal voltage (V) | 220-240 |
| Nominal frequency (Hz) | 50 |
| Nominal input power (W) | 276 |
| Electric shock protection | Class II |
| Plug type | No plug |

## Accessories

| | |
|---|---|
| Upper decorative duct extension | 02861306 |
| Activated charcoal filter | 02859391 |
| Noiseless flexible duct | 02893002 |