FILTER **GROUPS**

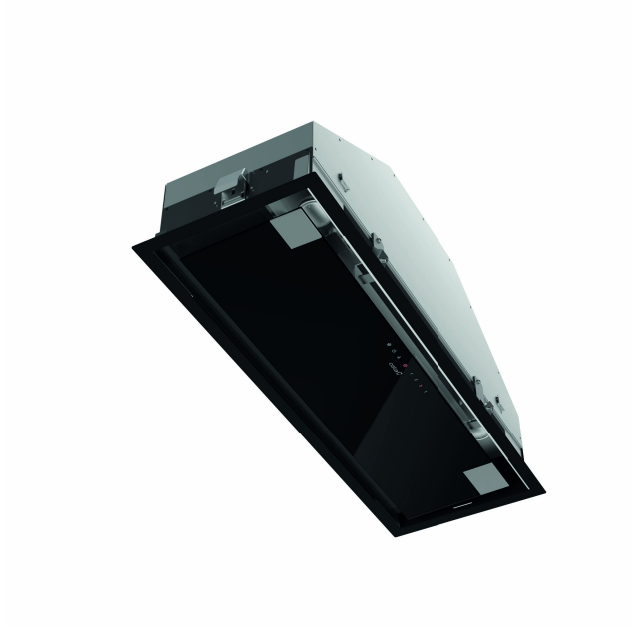

GC DUAL 75 BK

Cod. **02131208** EAN **8422248078320**

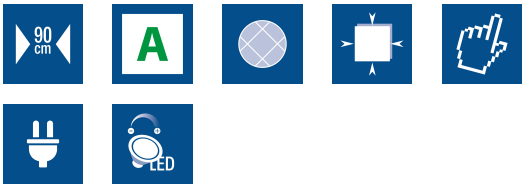

GENERAL INFORMATION
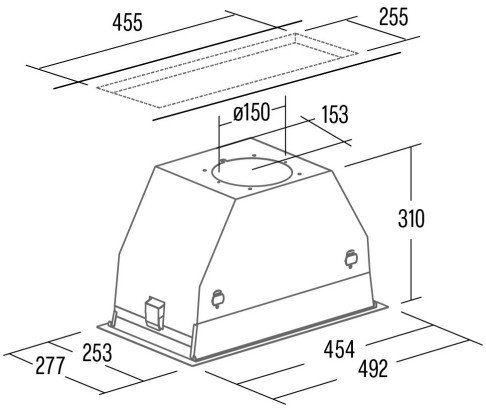
EAN/UPC	8422248078320
Subfamily	Insert