DECORATIVE **VERTICAL**

THALASSA PRO 600 GBK

Cod. **02136407** EAN **8422248356312**

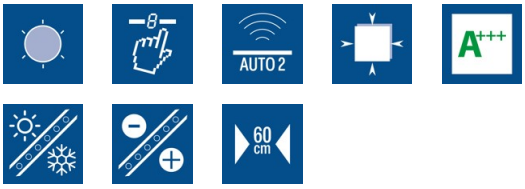

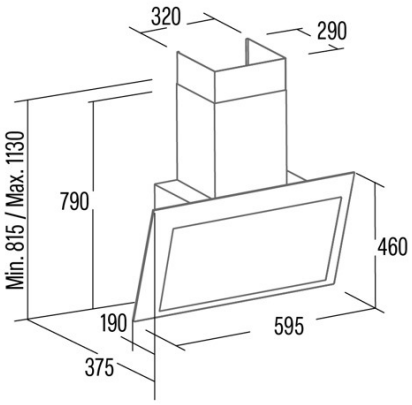

GENERAL INFORMATION

EAN/UPC	8422248356312
Subfamily	Angle Glass

Product sheet according to directives EU65/2014 - EN61591, EN60704-2-13, EN50564

AEC (Annual energy consumption) (kWh/year)	16,8
EEI class (energy efficiency class)	A+++
FDE (fluid dynamic efficiency)	40,3
FDE class (fluid dynamic efficiency class)	A
LE (light efficiency) (lux/W)	23,7
LE class (light efficiency class)	B
GFE (grease filtering efficiency)	75,5
GFE class (grease filtering efficiency class)	C
Airflow in normal mode MIN (m3/h)	283
Airflow in normal mode MAX (m3/h)	640
Airflow in boost mode MIN (m3/h)	842
Acoustic power in normal mode MIN (dB)	46
Acoustic power in normal mode MAX (dB)	64
Acoustic power boost mode (dB)	69
Po (energy consumption in off mode) (W)	0
Ps (energy consumption in standby mode) (W)	0,35

Integration directive EU 66/2014

f (time increase factor)	0,5
EEI (Energy Efficiency Index)	27,5
QBEP (maximum efficiency at air flow point) (m3/h)	369,6
PBEP (maximum efficiency at pressure point) (Pa)	314
WBEP (power consumption at maximum efficiency) (W)	80
WL (nominal power lighting system) (W)	3
EMIDDLE (Average illuminance on the cooking surface) (lux)	71

External Dimensions

Width (mm)	600
Depth (mm)	375
Maximum total height (mm)	1130
Minimum total height (mm)	815
Diamètre de sortie (mm)	150

Characteristics

Motor quantity	1
Motor model	BT4DC
Maximum pressure (Pa)	450
Filter technology	Aluminium mesh
Control technology	Electronic Touch Control
Booster	√
Power levels	6
Timer	√
Filter saturation indicator	√
Charcoal filter replacement indicator	√
Dimmer function	√
Connectivity	√
Remote control	-
Display	Display

Lighting

Light model	SSLED
Ray technology	LED

Installation

Minimum distance to electric plate (mm)	450
Minimum distance to gas plate (mm)	650

Recirculation option	√
Charcoal filter	√
Back draught shutter	No
Inner shield	-

Electric connection

Nominal voltage (V)	220-240
Nominal frequency (Hz)	50/60
Nominal input power (W)	138
Electric shock protection	Class I
Plug type	No plug

Accessories

Upper decorative duct extension	02861300
White decorative duct	02861001
Black decorative duct	02861401
Back draught shutter	02832004
Activated charcoal filter	02859318
Noiseless flexible duct	02893002
Recirculation kit	02800013