COMBI FRIDGE **FREEZER**

CI-54177 NF

Cod. **07800080** EAN **8422248373746**

NoFrost LED E

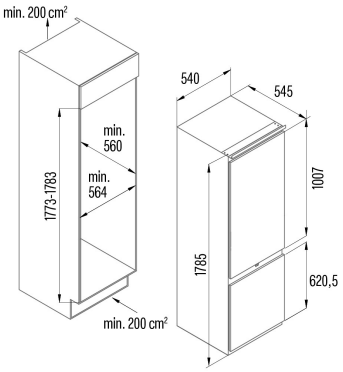

GENERAL INFORMATION

EAN/UPC	8422248373746
Subfamily	Combi

Product sheet according to EU Regulation 2019/2016

Category	7
Energy efficiency class	E
Energy consumption [kWh/year]	223
Refrigerator storage volume [l]	180
Freezer storage volume [l]	68
Star rating	4
Frost-free fridge	√
Frost-free freezer	√
Power cut safety [h]	6
Freezing capacity [kg/24h]	6
Climate class	SN/N/ST/T
Noise emissions [dBA]	35
Installation type	Built-In

Refrigerator equipment

Number of door balconies	3
Number of glass shelves	4
Fruit and vegetable drawer	1
Metallic interior decoration	√

Freezer equipment

Number of drawers	3
Number of closed drawers	2

Ilumination

Refrigerator light	√
Freezer light	-
LED light	√

Power and water connection

Nominal voltage (V)	220-240
Nominal frequency (Hz)	50
Nominal input power (W)	160
Power cord length (m)	2
Plug type	Type F

Control

Control type	Electronic
Display	LED
Cooling system	No Frost
Electronic regulation of refrigerator temperature	√
Electronic regulation of freezer temperature	√
Super cooling function	√
Super freezing function	√
Public holiday celebration	-
Winter-summer function	-

Installation

Width (mm)	540
Height (mm)	1785
Depth (mm)	545
Built-in width (mm)	564
Built-in depth (mm)	560
Reversible doors	√
Wheels	-
Door opening side	Right