MULTI-FUNCTION **OVENS**

CMD 9208 BK

Cod. **07039305** EAN **8422248093156**

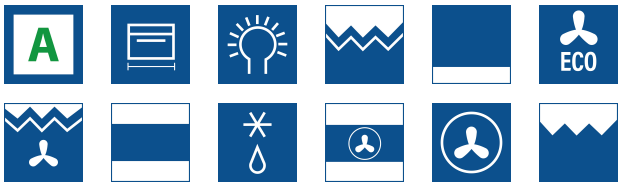

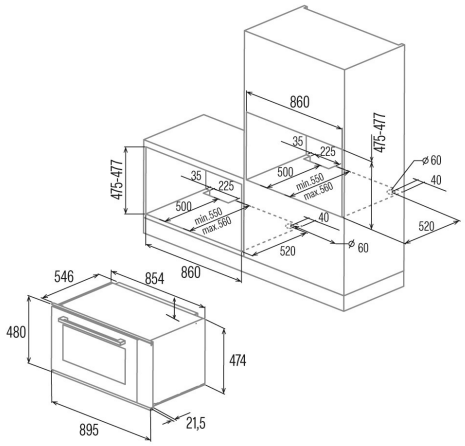

GENERAL INFORMATION

EAN/UPC	8422248093156
Subfamily	Multifunction

Product sheet

Energy Efficiency Index (EEI)	94
Energy efficiency class	A
Energy consumption in conventional mode (kWh/cycle)	1,15
Energy consumption in fan mode (kWh/cycle)	0,9
Heat source	Electricity
Appliance mass [Kg]	47,4
Number of cavities	1
Cavity volume (L)	93

Dimensions

Width (mm)	895
Height (mm)	480
Depth (mm)	546
Built-in width (mm)	860
Built-in height (mm)	475
Built-in depth (mm)	550

Controls

Control type	Touch control
Display	LCD
Number of functions	10
Functions	Double_grill_with_fan;Defrosting;Grill;Do Grill;Turbo heating;Eco;Light;3D cooking;Top and bottom heating;Bottom heating
Timer	Electronic
On/off indicator	√
Thermostat indicator	√
Minimum temperature [°C]	50
Maximum temperature [°C]	250
Thermal probe	-

Characteristics

Cleaning	No
Enamel	Black
Drop down grill	-
Removable inner glass	√
Number of light bulbs	50
Bulb power [W]	2
Number of door glasses	3
Manual door lock	-
Soft close	-
Cavity type	Flat
Side racks	√
Levels	5
Telescopic guides	No
Convection fan	√

Safety

Cooling fan	√
Overheating protection	√
Automatic safety shutdown	√
Pyrolysis door lock	-
Pyrolysis lock indicator	-

Electrical connection

Power of the upper heating element [W]	900
Lower power of the heating element [W]	1500
Turbocharger power [W]	2500

Nominal voltage (V)	220-240
Nominal frequency (Hz)	50/60
Nominal input power (W)	2800
Electric shock protection	Class I
Power cord length (m)	1
Plug type	No plug

Accessories

Flat tray	-
Deep tray	√
Steam tray	-
Grill	√
Inner grill	-
Telescopic guides	-
Tray handle	-
Removable tank	-
Pizza stone	-
Roast kit	-