CAMPANAS **INTEGRACIÓN**

ARMONIA 70 BK

Cod. **02187409** EAN **8422248356015**

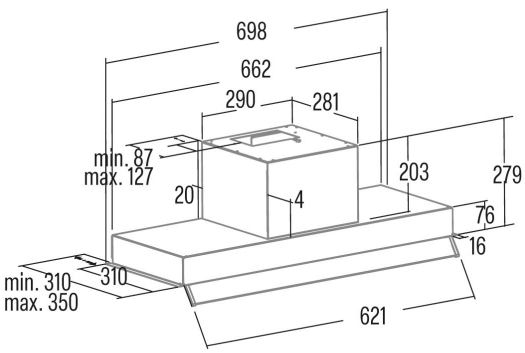

INFORMACIÓN GENERAL

EAN/UPC	8422248356015
Subfamily	Integrated

Product fiche according to directives EU65/2014 - EN61591, EN60704-2-13, EN50564

AEC (Energy consumption per year) (kWh/año)	100,9
EEI class (Energy efficiency class)	C
FDE (Fluid dynamic efficiency)	16,3
FDE class (Fluid dynamic efficiency class)	D
LE (Light efficiency) (lux/W)	21,4
LE class (Light efficiency class)	B
GFE (Grease filtering efficiency)	64,8
GFE Class (Grease filtering efficiency class)	D
Normal mode airflow MIN (m3/h)	385
Normal mode airflow MAX (m3/h)	645
Normal mode acustic power MIN (dB)	56
Normal mode acustic power MAX (dB)	70
Po (Off-mode power consumption) (W)	0
Ps (Stand-by power consumption) (W)	0

Integration directive EU 66/2014

f (Factor Increase in the time)	1,4
EEI (Energy efficiency Index)	82,4
QBEP (Maximum airflow point efficiency) (m3/h)	375,3
PBEP (Maximum pressure point efficiency) (Pa)	295
WBEP (Electrical power consumption at maximum efficiency) (W)	188,8
WL (Rated power lighting system) (W)	6
EMIDDLE (Average illuminance on the cooking surface) (lux)	269

External Dimensions

Width (mm)	698
Depth (mm)	310
Maximum Total Height (mm)	280
Minimum Total Height (mm)	280
Outlet Diameter (mm)	150, 125

Characteristics

Motor Quantity	1
Motor Model	TA
Maximum Pressure (Pa)	430
Filter Technology	Aluminium mesh
Control Tecnology	Mechanical push button
Booster	-
Power levels	3
Timer	-
Filter Saturation Indicator	-
Charcoal Filter Change Indicator	-
Dimmer Function	-
Connectivity	No
Remote control	-
Display	-

Lighting

Light Model	CSLED
Lightning Technology	LED

Installation

Minimum distance to an electric cooktop (mm)	450
Minimum distance to a gas cooktop (mm)	650
Recirculation Option	-

Charcoal Filter	-
Back Draught Shutter	No
Inner shield	-

Electric Connection

Rated voltage (V)	230-240
Rated frequency (Hz)	50
Rated power input (W)	276
Protection against electric shock	Class II
Plug type	No plug

Accessories

Upper Decorative Duct Extension	02861307
Active Charcoal Filter	02859392
Noiseless Flexible Duct	02893002