TERMOS **ELÉCTRICOS**

CTR-30-M

Cod. **03110001** EAN **8422248081528**

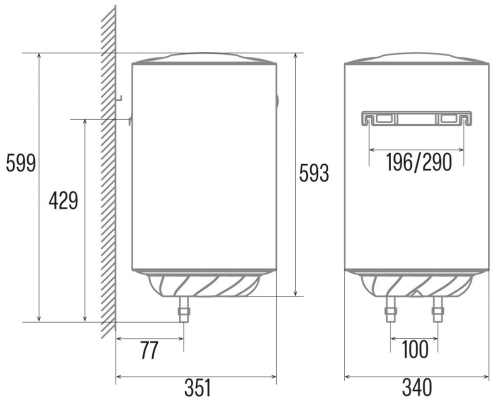

INFORMACIÓN GENERAL

EAN/UPC	8422248081528
Subfamily	Electric

Product fiche according to EU Regulation nº 812/2012

Declared Load Profile	S
Water Heating Energy Class	C
Water Heating Energy Efficiency (%)	31,6
Annual electricity consumption (kWh/year)	583
Thermostat temperature settings	75

Features

Capacity (L)	30
Number of persons	1-2
Installation	Vertical
Minimum set temperature	30
Maximum set temperature	75
Type of heating element	Enamel
Heating time 15ºC-65ºC (min)	70,2
Static losses 65ºC (kWh/24h)	0,81
Coating thickness (mm)	5

Controls

Type of control	Mechanical
Control position	Bottom
Electrical connection indicator	-
Temperature indicator	√
Heating indicator	√

Safety

Overheating protection	√
Safety temperature (ºC)	82
Freezing protection	-
Water protection index	IPX4
Maximum Working Pressure (Mpa)	0,75
Magnesium Anode Dimensions (mm)	D22x234

Power connection

Rated voltage (V)	220-240
Rated frequency (Hz)	50/60
Rated power input (W)	1500
Protection against electric shock	Class I
Power cord length (m)	1,5
Plug type	Type F

Installation

Width (mm)	340
Height (mm)	650
Depth (mm)	340