INTEGRACIÓN EN **SUPERFÍCIE**

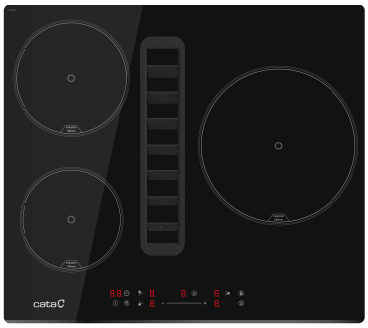

IAS 6003

Cod. **08000203** EAN **8422248373289**



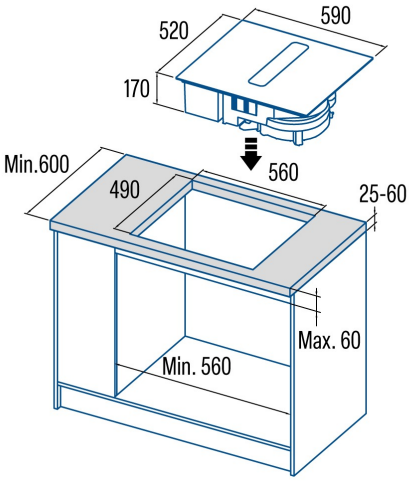

INFORMACIÓN GENERAL

EAN/UPC	8422248373289
Subfamily	Flow-in

Product fiche

Number of cooking zones	3
Zone 1: Technology	Induction
Zone 1: Zone type	Simple
Zone 1: Position	Front Left
Zone 1: Diameter of the zone (mm)	16
Zone 1: Power (kW)	1,5
Zone 2: Technology	Induction
Zone 2: Zone type	Simple
Zone 2: Position	Rear Left
Zone 2: Diameter of the zone (mm)	18
Zone 2: Power (kW)	2,3
Zone 3: Technology	Induction
Zone 3: Zone type	Simple
Zone 3: Position	Rear Right
Zone 3: Diameter of the zone (mm)	23
Zone 3: Power (kW)	3

Dimensions

Width (mm)	590
Height (mm)	170
Depth (mm)	520
Built-in width (mm)	490
Built-in depth (mm)	560

Finishing

Material	Glass

Control

Control type	Slider Touch Control
Control Position	Front Centre
Independent control by zone	√
Hidden control	-
Power levels	9
Knob type	N/A
Cooking time programming	√

Security

Security lock	√
Child lock	Yes (Key)

Electrical connection

Rated voltage (V)	220-240
Rated frequency (Hz)	50/60
Rated power input (W)	6700
Protection against electric shock	Class II
Plug type	No plug