INTEGRACIÓN EN **SUPERFÍCIE**

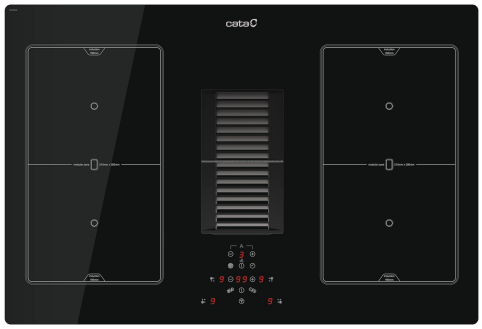

AS 750

Cod. **08000405** EAN **8422248109406**



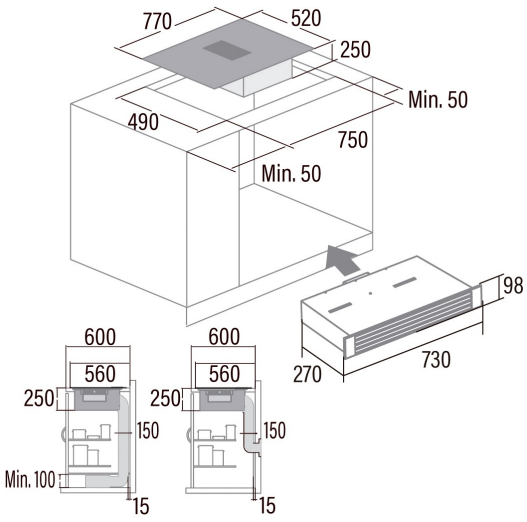

INFORMACIÓN GENERAL

EAN/UPC	8422248109406
Subfamily	Flow-in

Product fiche

Number of cooking zones	4
Zone 1: Technology	Induction
Zone 1: Zone type	Rectangular Flexible
Zone 1: Position	Front Left
Zone 1: Diameter of the zone (mm)	19
Zone 1: Power (kW)	2
Zone 1: Booster (kW)	2,8
Zone 1: Consumption (Wh / kg)	194,2
Zone 2: Technology	Induction
Zone 2: Zone type	Rectangular Flexible
Zone 2: Position	Rear Left
Zone 2: Diameter of the zone (mm)	19
Zone 2: Power (kW)	1,5
Zone 2: Booster (kW)	2
Zone 2: Consumption (Wh / kg)	181,5
Zone 3: Technology	Induction
Zone 3: Zone type	Rectangular Flexible
Zone 3: Position	Rear Right
Zone 3: Diameter of the zone (mm)	19
Zone 3: Power (kW)	1,5
Zone 3: Booster (kW)	2
Zone 3: Consumption (Wh / kg)	181,5
Zone 4: Technology	Induction
Zone 4: Zone type	Triple
Zone 4: Position	Front Right
Zone 4: Diameter of the zone (mm)	19
Zone 4: Power (kW)	2
Zone 4: Booster (kW)	2,8
Zone 4: Consumption (Wh / kg)	194,2

Dimensions

Width (mm)	770
Height (mm)	250
Depth (mm)	520
Built-in width (mm)	750
Buit-in height (mm)	250
Built-in depth (mm)	490
Easy installation System	Quick Fix

Finishing

Material	Glass
Bevel	Front
Frame	No
Cooking supports	N/A

Characteristics

Control Tecnology	Electronic Touch Control
Booster	√
Timer	√

Control

Control type	Touch control
Control Position	Front Centre
Independent control by zone	√
Hidden control	-
Power levels	9 + Booster
Knob type	N/A

Cooking time programming	√
Countdown alarm	√
Power management	√
Available Power Limits (kW)	No
Connectivity	No
Auto Ignition	N/A

Security

Security lock	√
Child lock	Yes (Key)
Residual heat indicator	√
Automatic detection of cookware	√
Intelligent detection of cookware	-
Automatic safety shutdown	√
Liquid spill protection	√
Safety Valve	-

Electrical connection

Rated voltage (V)	220-240
Rated frequency (Hz)	50/60
Rated power input (W)	7335
Protection against electric shock	Class I
Plug type	No plug