PLACA **INDUCCIÓN**

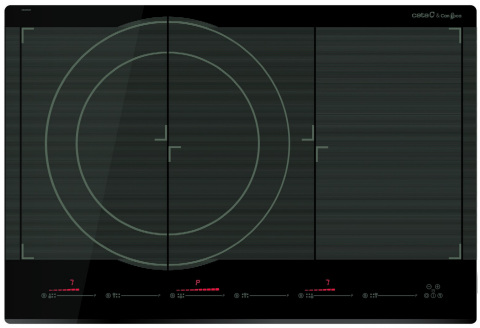

GIGA 750 BK

Cod. **08026001** EAN **8422248054485**

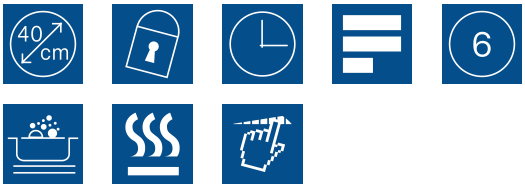

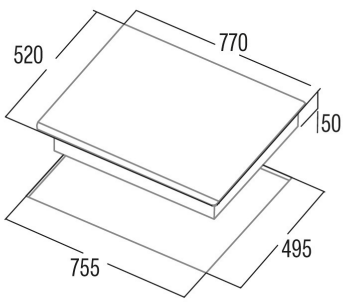

INFORMACIÓN GENERAL

EAN/UPC	8422248054485
Subfamily	Induction

Product fiche

Number of cooking zones	6
Zone 1: Technology	Induction
Zone 1: Zone type	Rectangular Flexible
Zone 1: Position	Front Left
Zone 1: Diameter of the zone (mm)	23,5x19
Zone 1: Power (kW)	2,1
Zone 1: Booster (kW)	3,7
Zone 1: Consumption (Wh / kg)	182,7
Zone 1B: Diameter of the zone (mm)	N/A
Zone 1C: Diameter of the zone (mm)	N/A
Zone 2: Technology	Induction
Zone 2: Zone type	Rectangular Flexible
Zone 2: Position	Rear Left
Zone 2: Diameter of the zone (mm)	23,5x19
Zone 2: Power (kW)	2,1
Zone 2: Booster (kW)	3,7
Zone 2: Consumption (Wh / kg)	182,7
Zone 2B: Diameter of the zone (mm)	N/A
Zone 2C: Diameter of the zone (mm)	N/A
Zone 3: Technology	Induction
Zone 3: Zone type	Rectangular Flexible
Zone 3: Position	Front Centre
Zone 3: Diameter of the zone (mm)	23,5x19
Zone 3: Power (kW)	2,1
Zone 3: Booster (kW)	3,7
Zone 3: Consumption (Wh / kg)	182,7
Zone 3B: Diameter of the zone (mm)	N/A
Zone 3C: Diameter of the zone (mm)	N/A
Zone 4: Technology	Induction
Zone 4: Zone type	Rectangular Flexible
Zone 4: Position	Rear Centre
Zone 4: Diameter of the zone (mm)	23,5x19
Zone 4: Power (kW)	2,1
Zone 4: Booster (kW)	3,7
Zone 4: Consumption (Wh / kg)	182,7
Zone 4B: Diameter of the zone (mm)	N/A
Zone 4C: Diameter of the zone (mm)	N/A
Zone 5: Technology	Induction
Zone 5: Zone type	Rectangular Flexible
Zone 5: Position	Rear Right
Zone 5: Diameter of the zone (mm)	23,5x19
Zone 5: Power (kW)	2,1
Zone 5: Booster (kW)	3,7
Zone 5: Consumption (Wh / kg)	182,7
Zone 5B: Diameter of the zone (mm)	N/A
Zone 5C: Diameter of the zone (mm)	N/A
Zone 6: Technology	Induction
Zone 6: Zone type	Rectangular Flexible
Zone 6: Position	Front Right
Zone 6: Diameter of the zone (mm)	23,5x19
Zone 6: Power (kW)	2,1
Zone 6: Booster (kW)	3,7
Zone 6: Consumption (Wh / kg)	182,7
Zone 6B: Diameter of the zone (mm)	N/A
Zone 6C: Diameter of the zone (mm)	N/A

Dimensions

Width (mm)	770
Height (mm)	50
Depth (mm)	520
Built-in width (mm)	755
Built-in depth (mm)	495
Easy installation System	Quick Fix

Finishing

Material	Glass
Bevel	Front
Frame	No
Cooking supports	N/A

Control

Control type	Slider Touch Control
Control Position	Front Centre
Independent control by zone	√
Hidden control	-
Power levels	9 + Booster
Knob type	N/A
Cooking time programming	√
Countdown alarm	√
Power management	-
Connectivity	No
Auto Ignition	N/A

Security

Security lock	√
Child lock	Yes (Key)
Residual heat indicator	√
Automatic detection of cookware	√
Intelligent detection of cookware	√
Automatic safety shutdown	√
Liquid spill protection	√
Safety Valve	-

Electrical connection

Rated voltage (V)	220-240
Rated frequency (Hz)	50/60
Rated power input (W)	11
Protection against electric shock	Class I
Power cord length (m)	1
Plug type	No plug

Accessories

Barbecue grill	3017400