PLACAS **GAS**

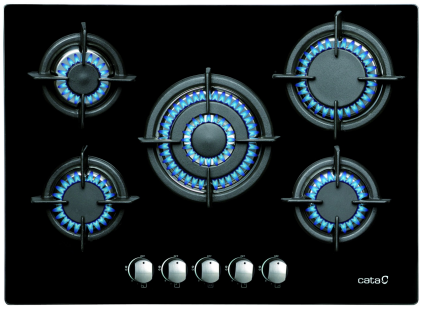

# L-7005 CI

Cod. **08046410** EAN **8422248081962**




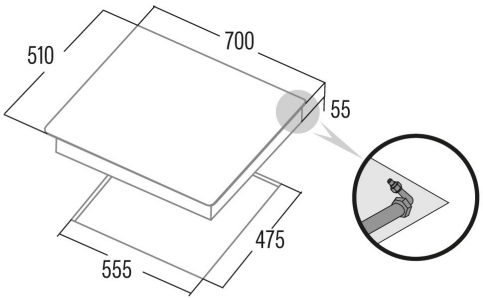


## INFORMACIÓN GENERAL

| | |
|---|---|
| EAN/UPC | 8422248081962 |
| Subfamily | Gas |

### Product fiche

| | |
|---|---|
| Number of cooking zones | 5 |
| Zone 1: Technology | GAS |
| Zone 1: Zone type | Triple |
| Zone 1: Position | Centre |
| Zone 1: Power (kW) | 3,5 |
| Zone 2: Technology | GAS |
| Zone 2: Zone type | Rapid |
| Zone 2: Position | Rear Right |
| Zone 2: Power (kW) | 3 |
| Zone 3: Technology | GAS |
| Zone 3: Zone type | Semirapid |
| Zone 3: Position | Front Left |
| Zone 3: Power (kW) | 1,75 |
| Zone 4: Technology | GAS |
| Zone 4: Zone type | Auxiliary |
| Zone 4: Position | Rear Left |
| Zone 4: Power (kW) | 1 |
| Zone 5: Technology | GAS |
| Zone 5: Zone type | Semirapid |
| Zone 5: Position | Front Right |
| Zone 5: Power (kW) | 1,75 |

### Dimensions

| | |
|---|---|
| Width (mm) | 700 |
| Height (mm) | 55 |
| Depth (mm) | 510 |
| Built-in width (mm) | 555 |
| Built-in depth (mm) | 470 |
| Easy installation System | Clamping System |

### Finishing

| | |
|---|---|
| Material | Glass |
| Bevel | No |
| Frame | No |
| Cooking supports | Cast Iron |

### Control

| | |
|---|---|
| Control type | Mechanical |
| Control Position | Front Centre |
| Independent control by zone | √ |
| Hidden control | - |
| Power levels | Gradual |
| Cooking time programming | - |
| Countdown alarm | - |
| Power management | - |
| Available Power Limits (kW) | No |
| Connectivity | No |
| Auto Ignition | 220-240V |

### Security

| | |
|---|---|
| Security lock | - |
| Child lock | No |
| Residual heat indicator | - |
| Automatic detection of cookware | - |
| Intelligent detection of cookware | - |
| Automatic safety shutdown | - |
| Liquid spill protection | - |

| | |
|---|---|
| Safety Valve | √ |

## Electrical connection

| | |
|---|---|
| Rated voltage (V) | 220-240 |
| Rated frequency (Hz) | 50/60 |
| Rated power input (W) | 11 |
| Multi Phase Connection Option | 2 phases |
| Protection against electric shock | Class I |
| Plug type | No plug |

## Accessories

| | |
|---|---|
| Barbecue grill | No |