PLACAS **GAS**



CCI 6021 BK

Cod. **08068501** EAN **8422248073707**



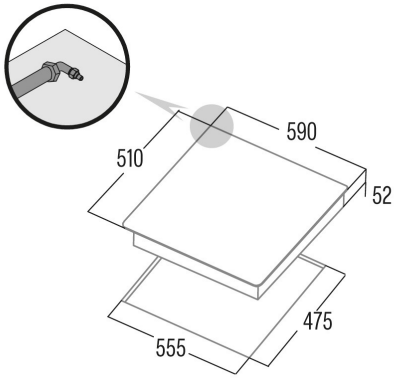

INFORMACIÓN GENERAL

EAN/UPC	8422248073707
Subfamily	Gas

Product fiche

Number of cooking zones	3
Zone 1: Technology	GAS
Zone 1: Zone type	Triple
Zone 1: Position	Left
Zone 1: Power (kW)	3,5
Zone 3: Technology	GAS
Zone 3: Zone type	Semirapid
Zone 3: Position	Rear Right
Zone 3: Power (kW)	1,75
Zone 4: Technology	GAS
Zone 4: Zone type	Auxiliary
Zone 4: Position	Front Right
Zone 4: Power (kW)	1

Dimensions

Width (mm)	590
Height (mm)	52
Depth (mm)	510
Built-in width (mm)	555
Built-in depth (mm)	475
Easy installation System	Clamping System

Finishing

Material	Glass
Bevel	No
Frame	No
Cooking supports	Cast Iron

Control

Control type	Mechanical
Control Position	Front Centre
Independent control by zone	√
Hidden control	-
Power levels	Gradual
Cooking time programming	-
Countdown alarm	-
Power management	-
Available Power Limits (kW)	No
Connectivity	No
Auto Ignition	220-240V

Security

Security lock	-
Child lock	No
Residual heat indicator	-
Automatic detection of cookware	-
Intelligent detection of cookware	-
Automatic safety shutdown	-
Liquid spill protection	-
Safety Valve	√

Electrical connection

Rated voltage (V)	220-240
Rated frequency (Hz)	50/60
Rated power input (W)	6,25
Multi Phase Connection Option	2 phases
Protection against electric shock	Class I

Plug type	No plug

Accessories

Barbecue grill	No