PLACA **INDUCCIÓN**

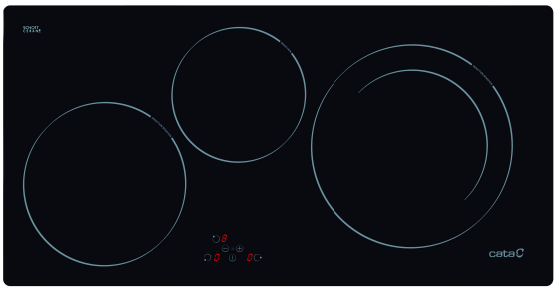

IB 753 BK

Cod. **08081202** EAN **8422248054478**



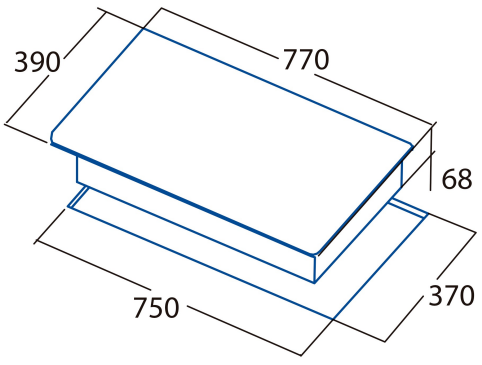

INFORMACIÓN GENERAL

EAN/UPC	8422248054478
Subfamily	Induction

Product fiche

Number of cooking zones	3
Zone 1: Technology	Induction
Zone 1: Zone type	Simple
Zone 1: Position	Front Left
Zone 1: Diameter of the zone (mm)	22
Zone 1: Power (kW)	2,3
Zone 1: Booster (kW)	3
Zone 1: Consumption (Wh / kg)	176,3
Zone 1B: Diameter of the zone (mm)	N/A
Zone 1C: Diameter of the zone (mm)	N/A
Zone 2: Technology	Induction
Zone 2: Zone type	Simple
Zone 2: Position	Rear Centre
Zone 2: Diameter of the zone (mm)	18
Zone 2: Power (kW)	1,4
Zone 2: Consumption (Wh / kg)	184,9
Zone 2B: Diameter of the zone (mm)	N/A
Zone 2C: Diameter of the zone (mm)	N/A
Zone 3: Technology	Induction
Zone 3: Zone type	Simple
Zone 3: Position	Right
Zone 3: Diameter of the zone (mm)	27
Zone 3: Power (kW)	2,3
Zone 3: Booster (kW)	3
Zone 3: Consumption (Wh / kg)	187,2
Zone 3B: Diameter of the zone (mm)	N/A
Zone 3C: Diameter of the zone (mm)	N/A
Zone 4: Technology	N/A
Zone 4: Zone type	N/A
Zone 4: Position	N/A
Zone 4: Diameter of the zone (mm)	N/A
Zone 4B: Diameter of the zone (mm)	N/A
Zone 4C: Diameter of the zone (mm)	N/A
Zone 5: Technology	N/A
Zone 5: Zone type	N/A
Zone 5: Position	N/A
Zone 5: Diameter of the zone (mm)	N/A
Zone 5B: Diameter of the zone (mm)	N/A
Zone 5C: Diameter of the zone (mm)	N/A
Zone 6: Technology	N/A
Zone 6: Zone type	N/A
Zone 6: Position	N/A
Zone 6: Diameter of the zone (mm)	N/A
Zone 6B: Diameter of the zone (mm)	N/A
Zone 6C: Diameter of the zone (mm)	N/A

Dimensions

Width (mm)	770
Depth (mm)	390
Built-in width (mm)	750
Built-in depth (mm)	370
Easy installation System	Quick Fix

Finishing

Material	Glass
Bevel	No
Frame	No

Cooking supports	N/A

Control

Control type	Touch control
Control Position	Front Centre
Independent control by zone	-
Hidden control	-
Power levels	9 + Booster
Knob type	N/A
Cooking time programming	√
Countdown alarm	√
Power management	-
Available Power Limits (kW)	No
Connectivity	No
Auto Ignition	N/A

Security

Security lock	-
Child lock	Yes (Combination)
Residual heat indicator	√
Automatic detection of cookware	√
Intelligent detection of cookware	-
Automatic safety shutdown	√
Liquid spill protection	√
Safety Valve	-

Electrical connection

Rated voltage (V)	220-240
Rated frequency (Hz)	50/60
Rated power input (W)	6,7
Protection against electric shock	Class I
Power cord length (m)	1
Plug type	No plug

Accessories

Barbecue grill	No